Eyelet collar socket CuNiSi OCK without lock

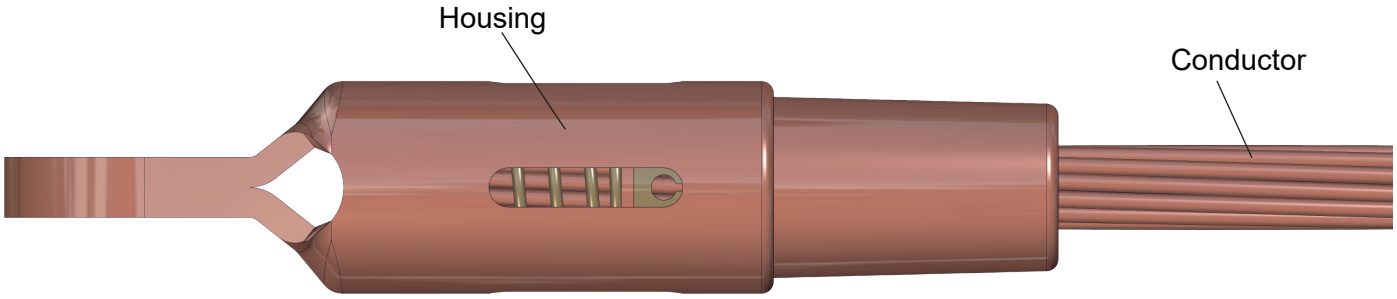

Index

A) Tools 1
B) Installation 2
C) Legal information 4

RISK OF DEATH
Before working on the overhead line: Ensure that the overhead line is de-energized and properly grounded according to the regulations.

A) Tools

- 1 Metal file
- 1 Binding wire

B) Installation

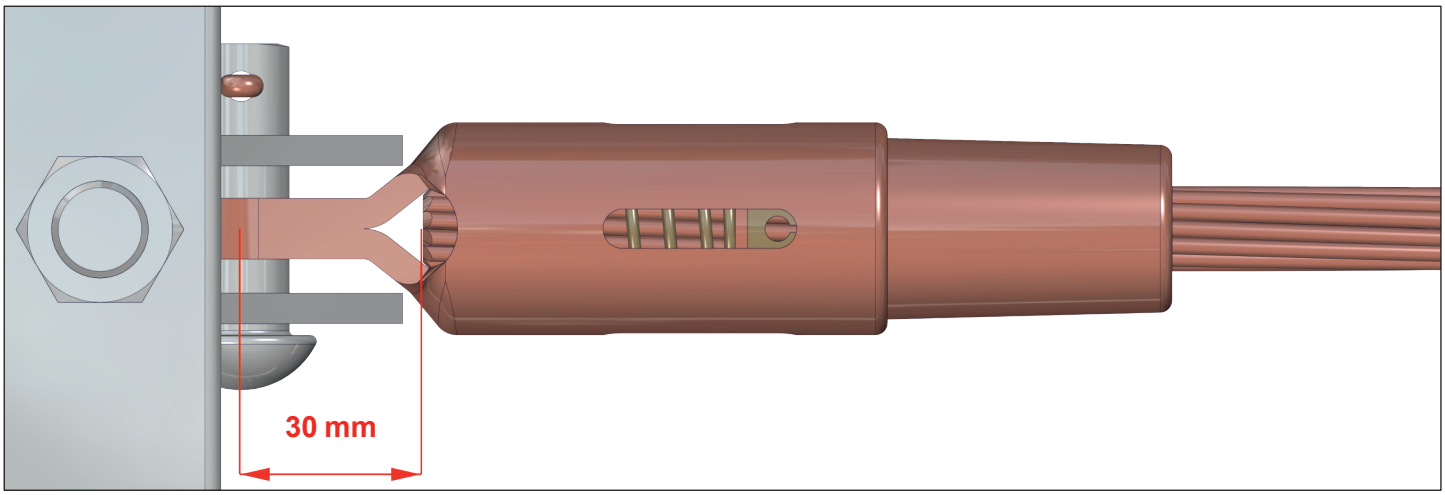

Cut the conductor so that the distance between the end of the conductor and the centre of the connecting bolt is approximately **30 mm**. If the conductor is a stranded cable make sure it does not unravel by using a binding wire.

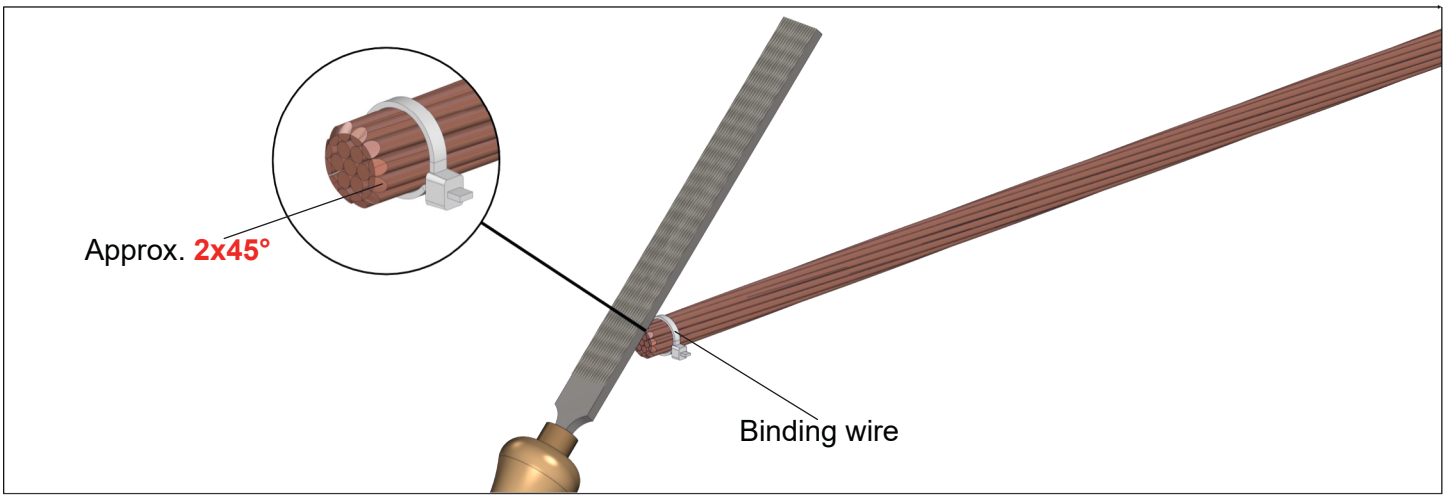

Remove any burrs or sharp edges at the conductor cutting surface (approx. **2×45°**).

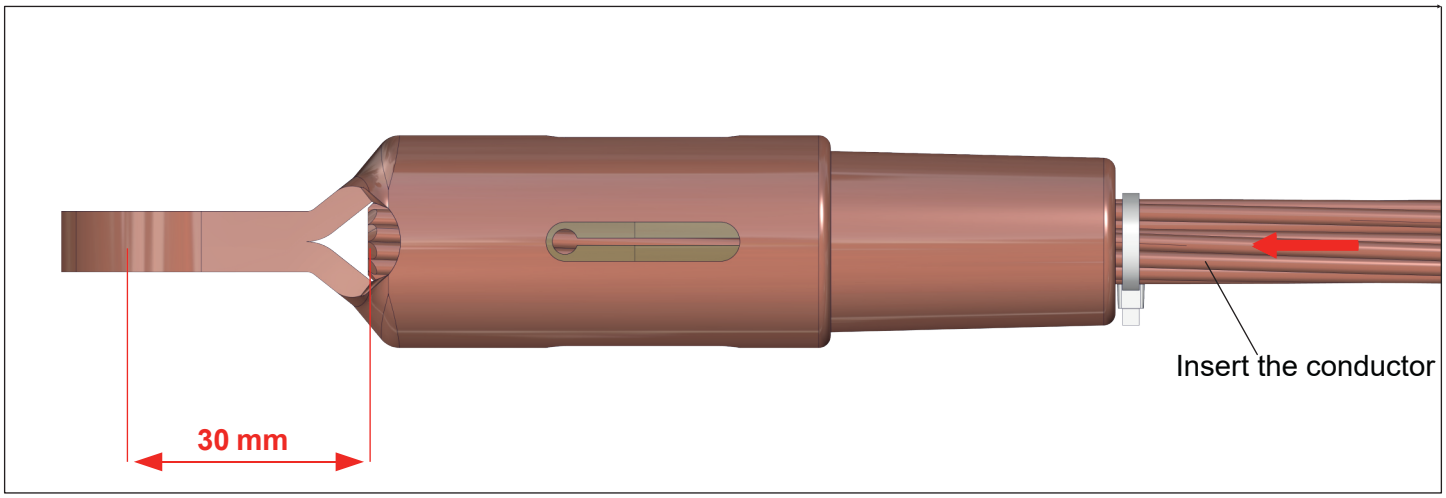

Insert the conductor into the eyelet collar socket until the end of the conductor protrudes clearly from the other side. The distance between the centre of the connecting bolt and the end of the conductor must be approximately **30 mm**. Remove the binding wire (if present).

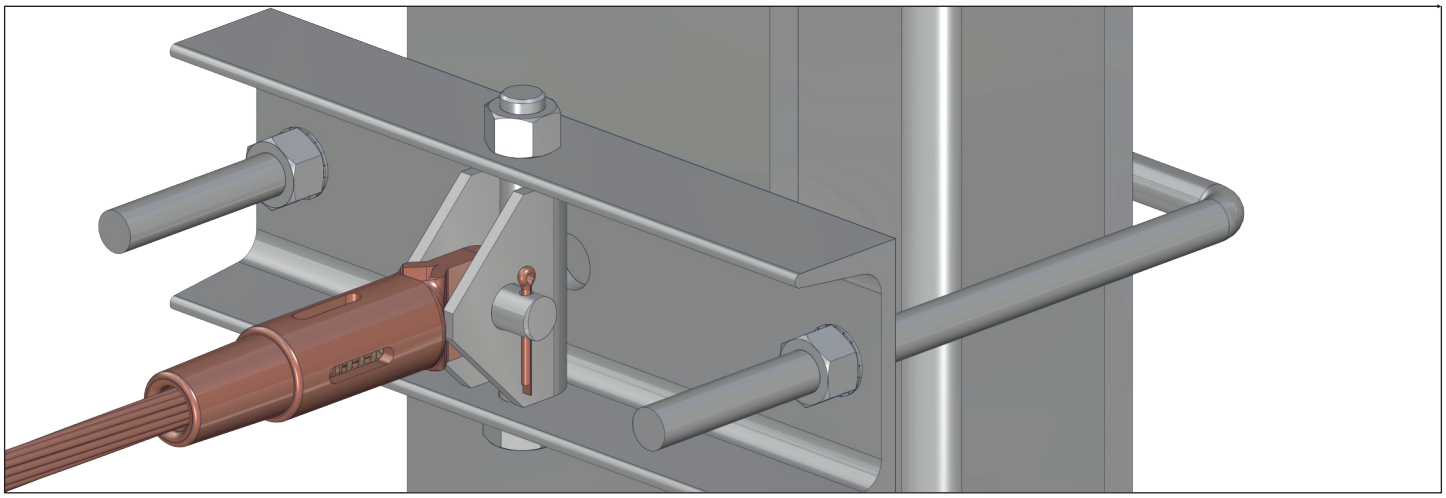

Attach the eyelet collar socket to the end terminal with the connecting bolt.

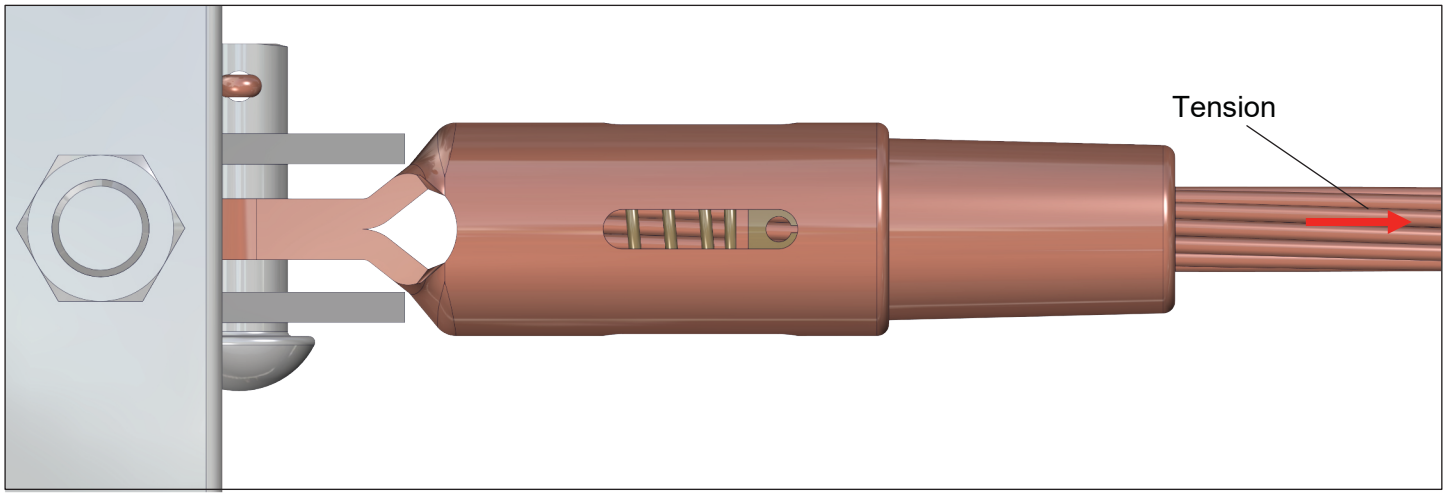

Tension the conductor. The minimum tension force is **3 kN.**

Reuse of eyelet collar sockets:

1. Eyelet collar sockets that have been used under operating load may only be reused under specific conditions. Please contact Arthur Flury AG for further information.

2. For safety reasons the restoration of eyelet collar sockets may only be carried out by Arthur Flury AG or a qualified partner. Otherwise, the guarantee will expire prematurely.

C) Legal information

The product must only be operated by trained specialists.

The product can be permanently damaged by loads that exceed the maximum values. If the product is exposed to absolute maximum loading for an extended period, it may impair the product's reliability and life. Arthur Flury AG will not accept any liability in this case.

Arthur Flury AG will not accept any liability for incorrect use and use for applications other than those specified in these instructions.

If damage to the product is suspected, any use or operation must be stopped immediately. Arthur Flury AG will not accept any liability in the event of continued use despite suspected damage.

Due to the diverse ways in which this product can be used, the instructions for use represent a general guide only and do not constitute a guarantee of the product's suitability for use in a specific application. The user is responsible for checking the full product data and clarifying the product's suitability for the intended use. The user is responsible for the choice of product and compliance with all the safety regulations and warnings. Please contact Arthur Flury AG if you require additional product information.

Our products comply with the current legal requirements and regulations (including RoHS, REACH, WEEE) in the markets where we operate. Please refer to Arthur Flury AG's Code of Conduct, available on our website, for further information.

These instructions are intended to provide the customer with information and should not be supplied unless accompanied by the product. The products and information in this publication require appropriately trained specialist personnel. Despite the greatest care being taken, the instructions may contain inaccuracies or typographical errors for Arthur Flury AG will not accept any liability. Arthur Flury AG may amend the instructions at any time, without notice, in the interests of technical progress. The customer is responsible for downloading an up-to-date version of the instructions from Arthur Flury AG's website before using the product.

Any brand and product names used in these instructions are registered marks® or trademarks™ of their respective owners.

Arthur Flury AG will not accept any liability for damage incurred as a result of failure to comply with these instructions.